# 2.产品图纸（Product Drawings）

? RoHS | ? HF | ? REACH

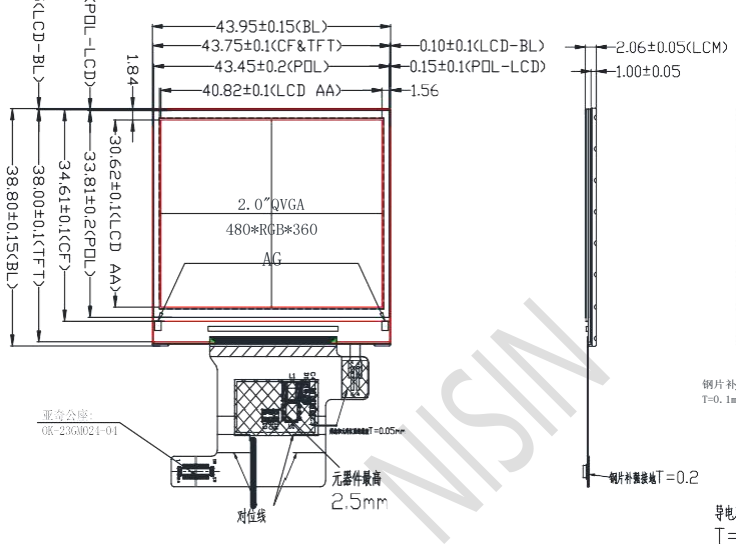


| PIN No. | PIN assignment |
|---|---|
| 1 | GND |
| 2 | NC |
| 3 | NC |
| 4 | NC |
| 5 | GND |
| 6 | DPC |
| 7 | DNO |
| 8 | GND |
| 9 | CP |
| 10 | CN |
| 11 | GND |
| 12 | RESET(1.8V) |
| 13 | LCD_TE |
| 14 | GND |
| 15 | IOVCC |
| 16 | NC |
| 17 | MIP |
| 18 | NC |
| 19 | VBAT(3.3V) |
| 20 | VBAT(3.3V) |
| 21 | GND |
| 22 | NC |
| 23 | LEDPWM |
| 24 | GND |

FPC弯折示意图

FPC弯折出货

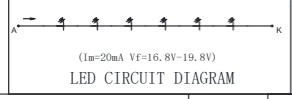


LED CIRCUIT DIAGRAM

NOTE:

1. DISPLAY TYPE:2.0"TFT,TRANSMISSIVE
2. DRIVER IC: ST7701S
3. VIEWING DIRECTION: FREE
4. OPERATING TEMPERATURE:-20° C-+70° C.
5. STORAGE TEMPERATURE:-30° C-+80° C.
6. BACKLIGHT TYPE:6 WHITE LEDS.
7. (...) REFERENCE DIMENSION.
8. " "☒CON MEAN CRITICAL DIM
9. MUST MEET THE REQUIREMENT OF ROHS

| REVISION RECORD | | DATE |
|---|---|---|
| 1 | | |
| 2 | 初版 | 20240816 |
| 3 | | |
| 4 | | |
| 5 | | |
| 6 | | |

NISIN SHENZHEN NISIN OPTOELECTRONICS CO., LTD

| | | | |
|---|---|---|---|
| DRAW TYPE. : ASSY-Outline | | DRAW NO. : NS20YL2401AL | |
| | | Ver. : V0020240816 | SCALE : N.T.S. |
| DRAWN | LSL | DATE | UNIT : mm |
| CHECKED | | DATE | PRO.(3): |
| APPROVED | | DATE | SHEET : 1/1 |

NISIN
RoHS